Cambridge International AS & A Level

Cambridge International Examinations
Cambridge International Advanced Subsidiary and Advanced Level

CANDIDATE NAME	
CENTRE NUMBER	CANDIDATE NUMBER

4057269296

PHYSICS **9702/22**

Paper 2 AS Level Structured Questions **October/November 2016**

1 hour 15 minutes

Candidates answer on the Question Paper.

No Additional Materials are required.

READ THESE INSTRUCTIONS FIRST

Write your Centre number, candidate number and name on all the work you hand in.
Write in dark blue or black pen.
You may use an HB pencil for any diagrams or graphs.
Do not use staples, paper clips, glue or correction fluid.
DO **NOT** WRITE IN ANY BARCODES.

Answer **all** questions.

Electronic calculators may be used.
You may lose marks if you do not show your working or if you do not use appropriate units.

At the end of the examination, fasten all your work securely together.
The number of marks is given in brackets [ ] at the end of each question or part question.

This document consists of **14** printed pages and **2** blank pages.

© UCLES 2016

CAMBRIDGE International Examinations

Data

speed of light in free space	$c = 3.00 \times 10^{8}\,\text{m s}^{-1}$
permeability of free space	$\mu_0 = 4\pi \times 10^{-7}\,\text{H m}^{-1}$
permittivity of free space	$\varepsilon_0 = 8.85 \times 10^{-12}\,\text{F m}^{-1}$
	$(\frac{1}{4\pi\varepsilon_0} = 8.99 \times 10^{9}\,\text{m F}^{-1})$
elementary charge	$e = 1.60 \times 10^{-19}\,\text{C}$
the Planck constant	$h = 6.63 \times 10^{-34}\,\text{J s}$
unified atomic mass unit	$1\,\text{u} = 1.66 \times 10^{-27}\,\text{kg}$
rest mass of electron	$m_e = 9.11 \times 10^{-31}\,\text{kg}$
rest mass of proton	$m_p = 1.67 \times 10^{-27}\,\text{kg}$
molar gas constant	$R = 8.31\,\text{J K}^{-1}\,\text{mol}^{-1}$
the Avogadro constant	$N_A = 6.02 \times 10^{23}\,\text{mol}^{-1}$
the Boltzmann constant	$k = 1.38 \times 10^{-23}\,\text{J K}^{-1}$
gravitational constant	$G = 6.67 \times 10^{-11}\,\text{N m}^2\,\text{kg}^{-2}$
acceleration of free fall	$g = 9.81\,\text{m s}^{-2}$

© UCLES 2016

Formulae

uniformly accelerated motion	$s = ut + \frac{1}{2}at^2$ $v^2 = u^2 + 2as$
work done on/by a gas	$W = p\Delta V$
gravitational potential	$\phi = -\frac{Gm}{r}$
hydrostatic pressure	$p = \rho gh$
pressure of an ideal gas	$p = \frac{1}{3}\frac{Nm}{V}\langle c^2 \rangle$
simple harmonic motion	$a = -\omega^2 x$
velocity of particle in s.h.m.	$v = v_0 \cos \omega t$ $v = \pm \omega \sqrt{(x_0^2 - x^2)}$
Doppler effect	$f_o = \frac{f_s v}{v \pm v_s}$
electric potential	$V = \frac{Q}{4\pi\varepsilon_0 r}$
capacitors in series	$1/C = 1/C_1 + 1/C_2 + \ldots$
capacitors in parallel	$C = C_1 + C_2 + \ldots$
energy of charged capacitor	$W = \frac{1}{2}QV$
electric current	$I = Anvq$
resistors in series	$R = R_1 + R_2 + \ldots$
resistors in parallel	$1/R = 1/R_1 + 1/R_2 + \ldots$
Hall voltage	$V_H = \frac{BI}{ntq}$
alternating current/voltage	$x = x_0 \sin \omega t$
radioactive decay	$x = x_0 \exp(-\lambda t)$
decay constant	$\lambda = \frac{0.693}{t_{\frac{1}{2}}}$

© UCLES 2016

[Turn over

BLANK PAGE

© UCLES 2016

Answer **all** the questions in the spaces provided.

1 (a) (i) Define *pressure*.

.....

.....[1]

(ii) Show that the SI base units of pressure are $kg\,m^{-1}\,s^{-2}$.

[1]

(b) Gas flows through the narrow end (nozzle) of a pipe. Under certain conditions, the mass m of gas that flows through the nozzle in a short time t is given by

$$\frac{m}{t} = kC\sqrt{\rho P}$$

where k is a constant with no units,
C is a quantity that depends on the nozzle size,
ρ is the density of the gas arriving at the nozzle,
P is the pressure of the gas arriving at the nozzle.

Determine the base units of C.

base units .....[3]

[Total: 5]

2 A ball of mass 0.030 kg moves along a curved track, as shown in Fig. 2.1.

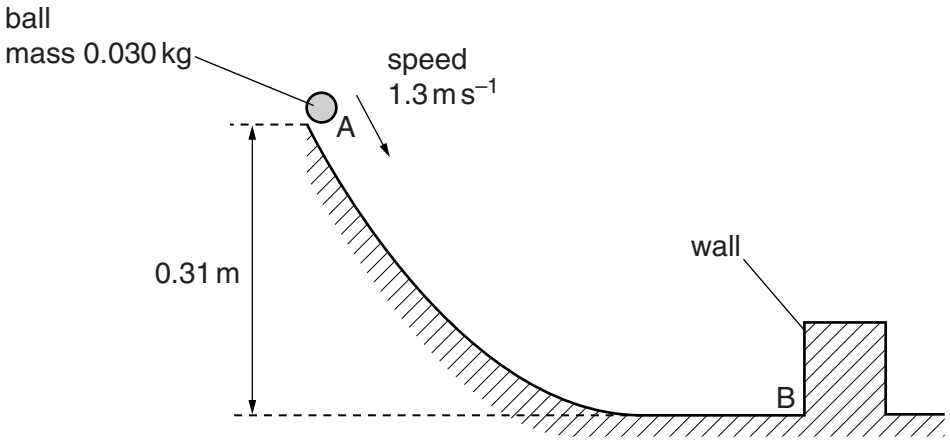

Fig. 2.1

The speed of the ball is 1.3 m s^{-1} when it is at point A at a height of 0.31 m.
The ball moves down the track and collides with a vertical wall at point B. The ball then rebounds back up the track. It may be assumed that frictional forces are negligible.

(a) Calculate the change in gravitational potential energy of the ball in moving from point A to point B.

change in gravitational potential energy = ... J [2]

(b) Show that the ball hits the wall at B with a speed of 2.8 m s^{-1}.

[3]

© UCLES 2016

(c) The change in momentum of the ball due to the collision with the wall is $0.096\,\text{kg}\,\text{m}\,\text{s}^{-1}$. The ball is in contact with the wall for a time of 20 ms.

Determine, for the ball colliding with the wall,

(i) the speed immediately after the collision,

speed = ... $\text{m}\,\text{s}^{-1}$ [2]

(ii) the magnitude of the average force on the ball.

force = ... N [2]

(d) State and explain whether the collision is elastic or inelastic.

.....

.....[1]

(e) In practice, frictional effects are significant so that the actual increase in kinetic energy of the ball in moving from A to B is 76 mJ. The length of the track between A and B is 0.60 m.

Use your answer in **(a)** to determine the average frictional force acting on the ball as it moves from A to B.

frictional force = ... N [2]

[Total: 12]

3 **(a)** State the two conditions for an object to be in equilibrium.

1. .....

.....

2. .....

.....
[2]

(b) A uniform beam AC is attached to a vertical wall at end A. The beam is held horizontal by a rigid bar BD, as shown in Fig. 3.1.

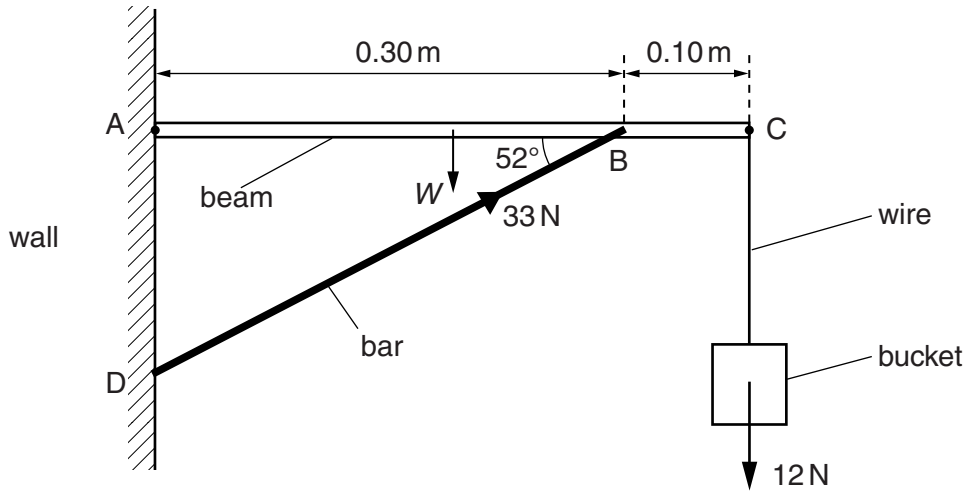

Fig. 3.1 (not to scale)

The beam is of length 0.40 m and weight *W*. An empty bucket of weight 12 N is suspended by a light metal wire from end C. The bar exerts a force on the beam of 33 N at 52° to the horizontal. The beam is in equilibrium.

(i) Calculate the vertical component of the force exerted by the bar on the beam.

component of the force = ... N [1]

(ii) By taking moments about A, calculate the weight *W* of the beam.

W = ... N [3]

© UCLES 2016

(c) The metal of the wire in **(b)** has a Young modulus of 2.0×10^{11} Pa.
Initially the bucket is empty. When the bucket is filled with paint of weight 78 N, the strain of the wire increases by 7.5×10^{-4}. The wire obeys Hooke's law.

Calculate, for the wire,

(i) the increase in stress due to the addition of the paint,

increase in stress = ... Pa [2]

(ii) its diameter.

diameter = ... m [3]

[Total: 11]

4 **(a)** State what is meant by the *diffraction* of a wave.

.....

.....[2]

(b) An arrangement for demonstrating the interference of light is shown in Fig. 4.1.

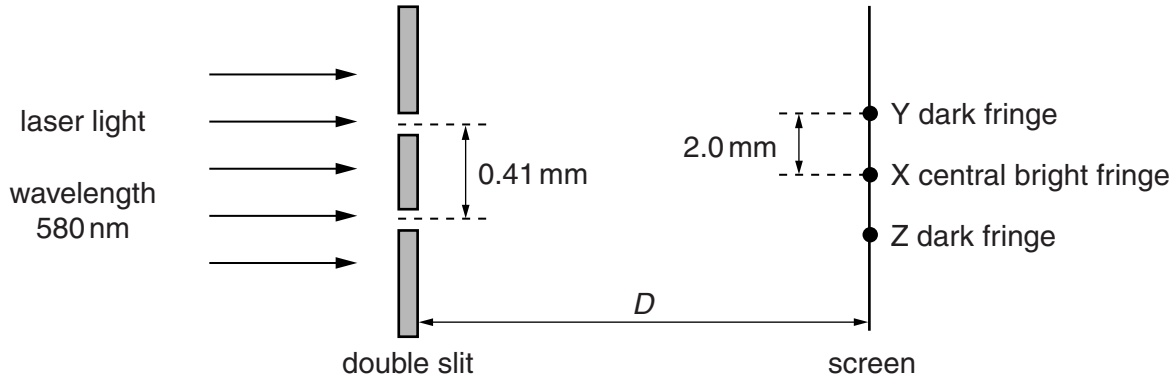

Fig. 4.1 (not to scale)

The wavelength of the light from the laser is 580 nm. The separation of the slits is 0.41 mm. The perpendicular distance between the double slit and the screen is *D*.

Coherent light emerges from the slits and an interference pattern is observed on the screen. The central bright fringe is produced at point X. The closest dark fringes to point X are produced at points Y and Z. The distance XY is 2.0 mm.

(i) Explain why a bright fringe is produced at point X.

.....

.....

.....

.....[2]

(ii) State the difference in the distances, in nm, from each slit to point Y.

distance = ... nm [1]

(iii) Calculate the distance *D*.

D = ... m [3]

(iv) The intensity of the light passing through the two slits was initially the same. The intensity of the light through **one** of the slits is now reduced. Compare the appearance of the fringes before and after the change of intensity.

.....

.....

.....

.....[2]

[Total: 10]

5 **(a)** State Kirchhoff's second law.

.....

.....

.....

.....[2]

(b) A battery is connected in parallel with two lamps A and B, as shown in Fig. 5.1.

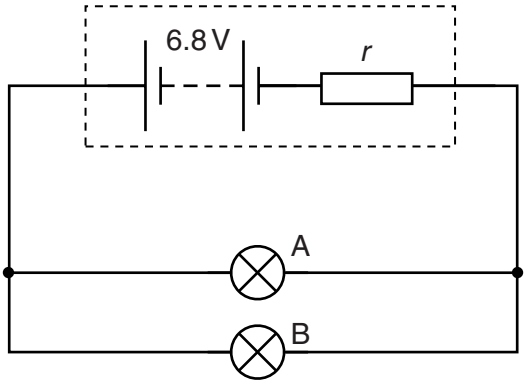

Fig. 5.1

The battery has electromotive force (e.m.f.) 6.8 V and internal resistance *r*.

The *I*–*V* characteristics of lamps A and B are shown in Fig. 5.2.

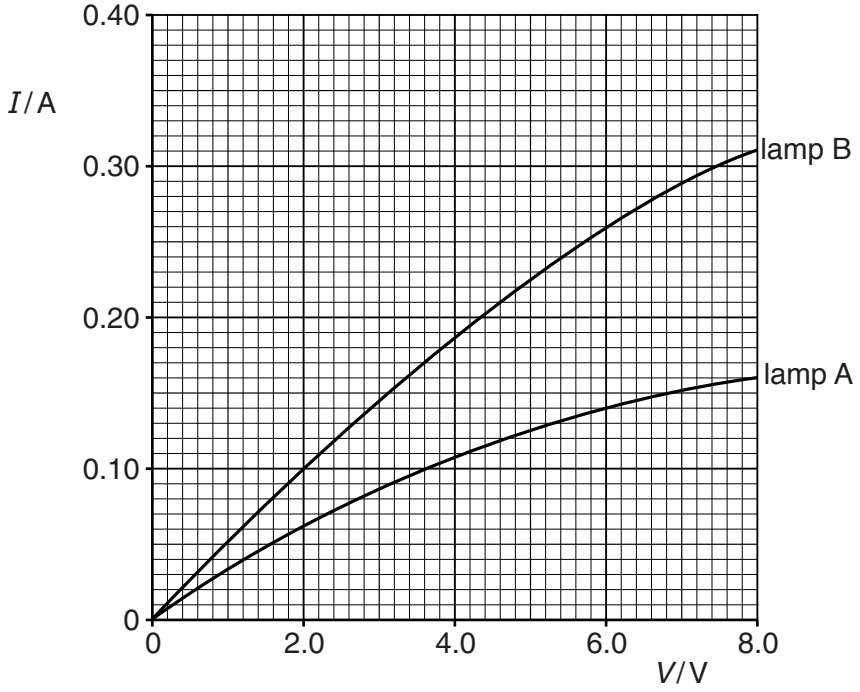

Fig. 5.2

The potential difference across the battery terminals is 6.0 V.

(i) Use Fig. 5.2 to show that the current in the battery is 0.40 A.

[2]

(ii) Calculate the internal resistance r of the battery.

r = ... Ω [2]

(iii) Determine the ratio

$$\frac{\text{resistance of lamp A}}{\text{resistance of lamp B}}.$$

ratio = ... [2]

(iv) Determine

1. the total power produced by the battery,

power = ... W [2]

2. the efficiency of the battery in the circuit.

efficiency = ... [2]

[Total: 12]

6 **(a)** State **one** difference between a hadron and a lepton.

.....

.....[1]

(b) A proton within a nucleus decays to form a neutron and two other particles. A partial equation to represent this decay is

$$^{1}_{1}p \rightarrow {}^{1}_{0}n + {}^{\cdots\cdots}_{\cdots\cdots} \cdots\cdots + {}^{\cdots\cdots}_{\cdots\cdots} \cdots\cdots$$

(i) Complete the equation. [2]

(ii) State the name of the interaction or force that gives rise to this decay.

.....[1]

(iii) State three quantities that are conserved in the decay.

1. .....

2. .....

3. .....

[3]

(c) Use the quark composition of a proton to show that it has a charge of $+e$, where e is the elementary charge.

Explain your working.

[3]

[Total: 10]

BLANK PAGE

Permission to reproduce items where third-party owned material protected by copyright is included has been sought and cleared where possible. Every reasonable effort has been made by the publisher (UCLES) to trace copyright holders, but if any items requiring clearance have unwittingly been included, the publisher will be pleased to make amends at the earliest possible opportunity.

To avoid the issue of disclosure of answer-related information to candidates, all copyright acknowledgements are reproduced online in the Cambridge International Examinations Copyright Acknowledgements Booklet. This is produced for each series of examinations and is freely available to download at www.cie.org.uk after the live examination series.

Cambridge International Examinations is part of the Cambridge Assessment Group. Cambridge Assessment is the brand name of University of Cambridge Local Examinations Syndicate (UCLES), which is itself a department of the University of Cambridge.